SALES DRAWING SALES DRAWING

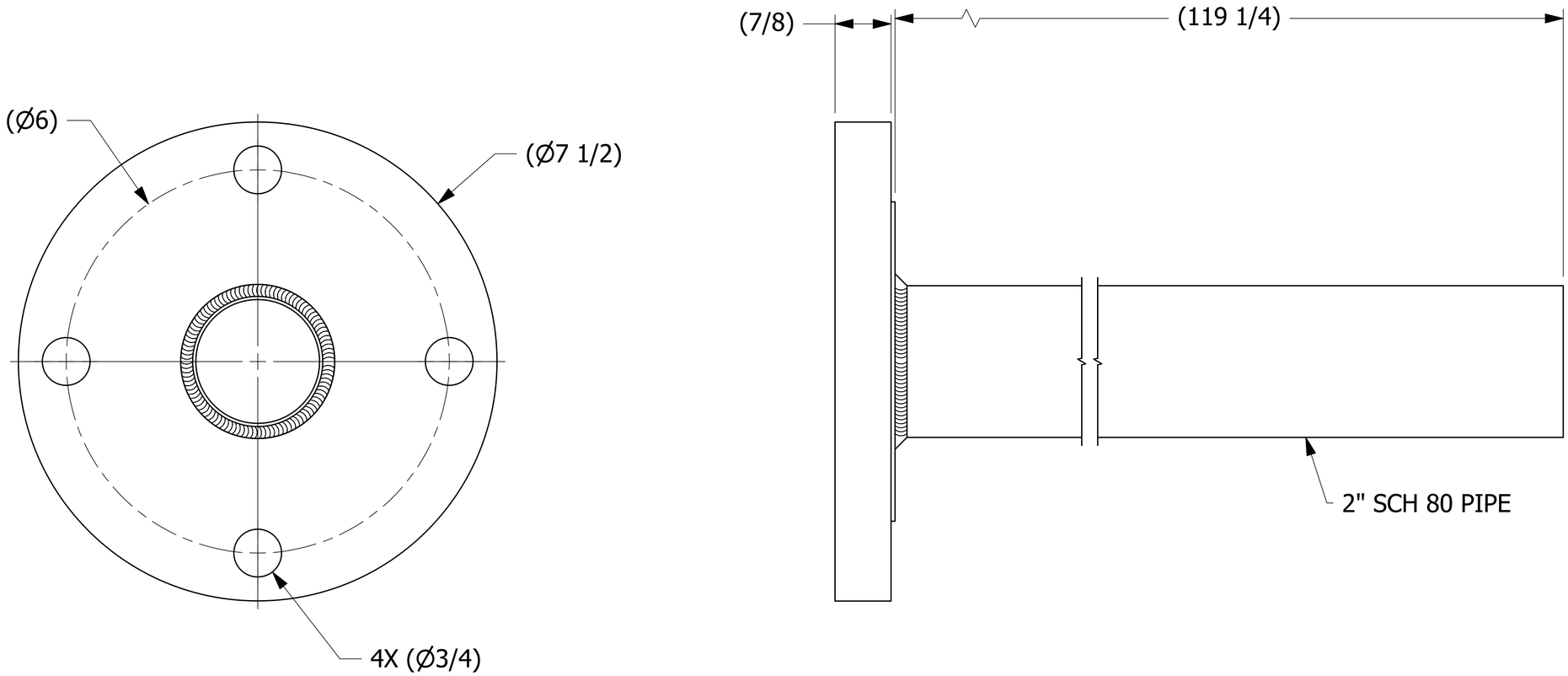

SALES DRAWING SALES DRAWING

REV	BY	DATE	REF #	
B	WEB	5/13/20	202005131317	WEB
				PUB

UNLESS OTHERWISE SPECIFIED DIMENSIONAL TOLERANCES

FRACTIONAL:	±1/16
X.XX:	±.03
X.XXX:	±.015
ANGULAR:	±1°

DEBURR ALL SHARP EDGES. ALL MACHINED SURFACES TO HAVE A 125 RMS FINISH UNLESS NOTED OTHERWISE.

THIRD ANGLE PROJECTION

DRAWN BY:	JG
CHECKED BY:	EJF
PROTOTYPE DATE:	4/18/2017
APPROVED FOR PRODUCTION BY:	VD
PRODUCTION DATE:	5/23/2017
SIZE:	D
DRAWING #:	45302

SALCO PRODUCTS, INC.

PART NAME: EDUCTION TUBE 3"X2"

MATERIAL: 316 SS

PROJECT #: R170413

SHEET #: 1 OF 1

SCALE: 1 : 1

PART #: EDT32119S6

THIS PRINT, PROPERTY OF SALCO PRODUCTS INC, CONTAINS PROPRIETARY INFORMATION AND MUST NOT BE COPIED, REPRODUCED, OR USED DETRIMENTALLY TO OUR INTEREST.